Practice

1. Find V_0 in this circuit:

Loads connected in series have the same current; loads connected in parallel have the same potential difference.

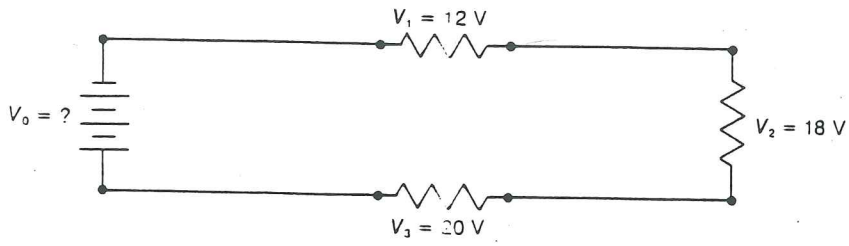

$V_0 = 50$

2. Find I_0 in this circuit:

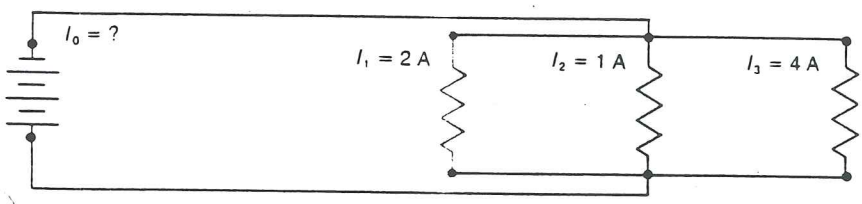

$I_0 = 7$

Find V_2, V_4, I_3, and I_4 in this circuit:

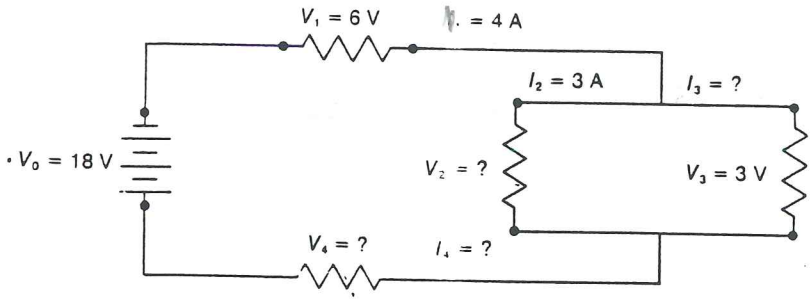

V_0	18	I_0	R_0
V_1	6	I_1	4 R_1
V_2	3	I_2	3 R_2
V_3	3	I_3	1 R_3
V_4	9	I_4	4 R_4

4. Find V_2, V_5, V_4, I_1, and I_4 in this circuit:

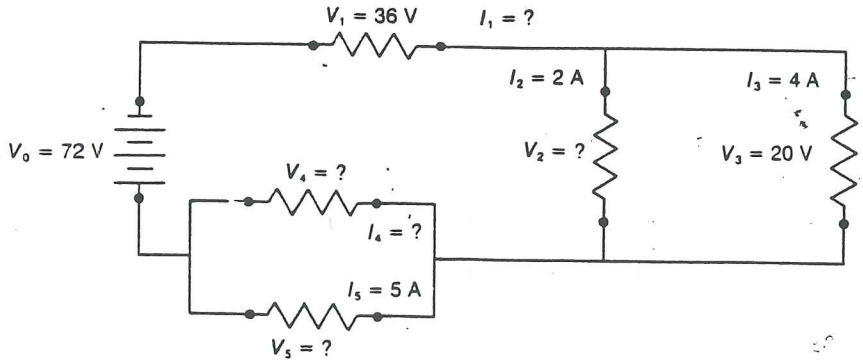

V_0	72	I_0	6
V_1	36	I_1	6
V_2	20	I_2	2
V_3	20	I_3	4
V_4	16	I_4	1
V_5	16	I_5	5

V_0 120 I_0 1.5 R_0 80
V_1 15 I_1 1.5 R_1 10
V_2 45 I_2 1.5 R_2 30
V_3 60 I_3 1.5 R_3 40

3. In this circuit, find V_1, V_3, I_1, I_2, I_3, and R_3.

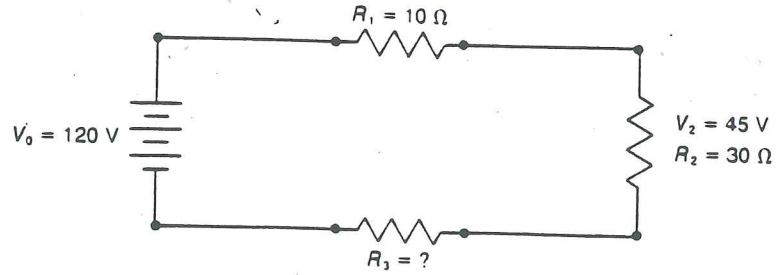

V_0 180 I_0 12 R_0 15
V_1 180 I_1 3 R_1 60
V_2 180 I_2 3 R_2 60
V_3 180 I_3 6 R_3 30

4. In this circuit, find V_0, V_1, V_2, V_3, I_0, I_1, and I_2.

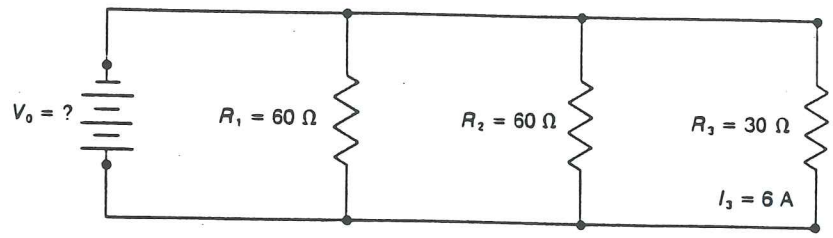

V_0 120 I_0 6 R_0 20
V_1 30 I_1 1 R_1 30
V_2 30 I_2 5 R_2 6
V_3 90 I_3 6 R_3 15

5. In this circuit, find V_1, V_2, V_3, I_0, I_1, I_2, and I_3.

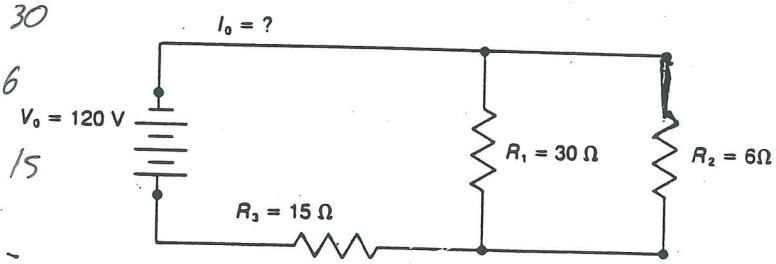

V_0 120 I_0 6 R_0 20
V_1 60 I_1 1 R_1 60
V_2 60 I_2 5 R_2 12
V_3 24 I_3 6 R_3 4
V_4 36 I_4 3.27 R_4 11
V_5 36 I_5 1.64 R_5 22
V_6 36 I_6 1.09 R_6 33

$\frac{1}{60}+\frac{1}{12}=\frac{6}{60}=10$

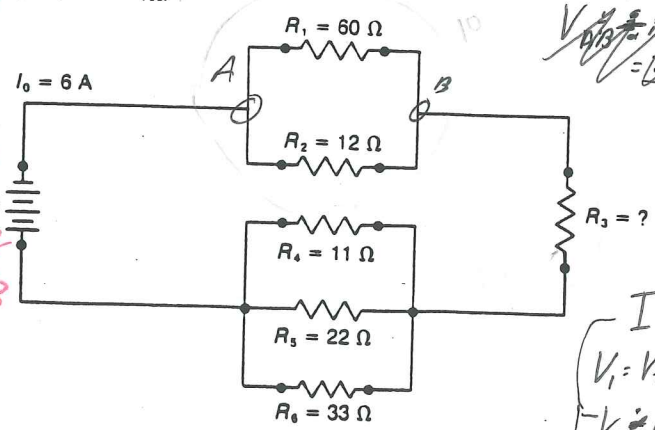

$I_1+I_2=6$
$V_1=V_2$
$V_1 \div 60 = I_1$
$V_1 \div 12 = I_2$

$\frac{1}{11}+\frac{1}{22}+\frac{1}{33}=\frac{11}{66}=6$

$20-10-6=4$