PHYSICS B
SECTION II
Time—90 minutes
7 Questions

Directions: Answer all seven questions, which are weighted according to the points indicated. The suggested times are about 11 minutes for answering Questions 1 and 4-7 and about 17 minutes for answering each of Questions 2 and 3. The parts within a question may not have equal weight. Show all your work in the pink booklet in the spaces provided after each part, NOT in this green insert.

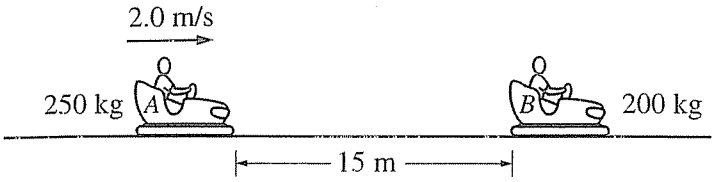

1. (10 points)

Several students are riding in bumper cars at an amusement park. The combined mass of car *A* and its occupants is 250 kg. The combined mass of car *B* and its occupants is 200 kg. Car *A* is 15 m away from car *B* and moving to the right at 2.0 m/s, as shown, when the driver decides to bump into car *B*, which is at rest.

(a) Car *A* accelerates at $1.5\ \text{m/s}^2$ to a speed of $5.0\ \text{m/s}$ and then continues at constant velocity until it strikes car *B*. Calculate the total time for car *A* to travel the 15 m.

(b) After the collision, car *B* moves to the right at a speed of $4.8\ \text{m/s}$.

i. Calculate the speed of car *A* after the collision.

ii. Indicate the direction of motion of car *A* after the collision.

____ To the left ✓ To the right ____ None; car *A* is at rest.

(c) Is this an elastic collision?

____ Yes ____ No

Justify your answer.

a) $d = d_1 + d_2 = 15$

accel dist — const vel dist

$t_1 = \frac{V_f - V_0}{a} = \frac{5-2}{1.5} = 2s$

$d_1 = \frac{V_f^2 - V_0^2}{2a} = \frac{5^2 - 2^2}{2(1.5)} = 7m$

$t_2 = \frac{d}{V_0} = \frac{8}{5} = 1.6$

$t_{TOT} = 3.6$ sec.

$d_2 = 15 - 7 = 8m$

b i $m_1v_1 + m_2v_2 = m_1v_1' + m_2v_2'$

$250(5) = 250\,v_1' + 200(4.8)$

$290 = 250\,v_1'$

$1.16\frac{m}{s} = v_1'$ ← to right

c ← elastic: kinetic energy cons.

$\frac{1}{2}250(5)^2 = ? = 3125J$

$\frac{1}{2}200(4.8)^2 + \frac{1}{2}250(1.16)^2 = 2472.2J$

No as E_k final < E_k initial

GO ON TO THE NEXT PAGE.

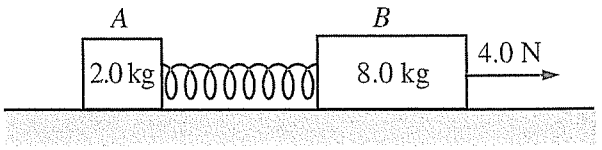

2. (15 points)

Block A of mass 2.0 kg and block B of mass 8.0 kg are connected as shown above by a spring of spring constant 80 N/m and negligible mass. The system is being pulled to the right across a horizontal frictionless surface by a horizontal force of 4.0 N, as shown, with both blocks experiencing equal constant acceleration.

(a) Calculate the force that the spring exerts on the 2.0 kg block. $F_{net} = ma$ $\quad 4 = (2+8)a \quad .4 = a$

$F_{net_2} = (2)(.4) = .8N$

(b) Calculate the extension of the spring.

$F = kx \quad .8 = 80x \quad x = .010m$ or $1.0cm$

The system is now pulled to the left, as shown below, with both blocks again experiencing equal constant acceleration.

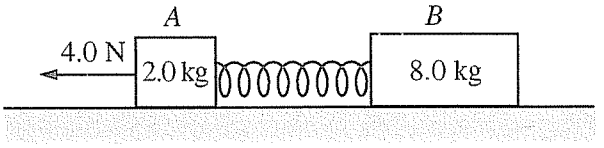

(c) Is the magnitude of the acceleration greater than, less than, or the same as before?

____ Greater ____ Less ✓ The same

Justify your answer.

(d) Is the amount the spring has stretched greater than, less than, or the same as before?

✓ Greater ____ Less ____ The same

Justify your answer. System F_{net} is same 4N ∴ same accel $\frac{4}{10} = .4$

$F_{net_B} = ma = 8 \times .4 = 3.2$ N, greater than F_{net_A} ∴ greater extension

(e) In a new situation, the blocks and spring are moving together at a constant speed of 0.50 m/s to the left. Block A then hits and sticks to a wall. Calculate the maximum compression of the spring.

$F = \frac{m\Delta v}{\Delta t} = kx$

$W = \Delta E = \Delta E_k = \Delta E_p$

$\frac{1}{2}mv^2 = \frac{1}{2}kx^2$

$8(.5)^2 = 80x^2$

$x = \sqrt{.025}$

$= .158m$

GO ON TO THE NEXT PAGE.

3. (15 points)

A rectangular wire loop is connected across a power supply with an internal resistance of 0.50 Ω and an emf of 16 V. The wire has resistivity 1.7×10^{-8} Ω•m and cross-sectional area 3.5×10^{-9} m^2. When the power supply is turned on, the current in the wire is 4.0 A.

(a) Calculate the length of wire used to make the loop.

$R = \frac{\rho l}{A}$ $.5 = \frac{1.7\times10^{-8}\, l}{3.5\times10^{-9}}$ $l = 0.103\,m$

The wire loop is then used in an experiment to measure the strength of the magnetic field between the poles of a magnet. The magnet is placed on a digital balance, and the wire loop is held fixed between the poles of the magnet, as shown below. The 0.020 m long horizontal segment of the loop is midway between the poles and perpendicular to the direction of the magnetic field. The power supply in the loop is turned on, so that the 4.0 A current is in the direction shown.

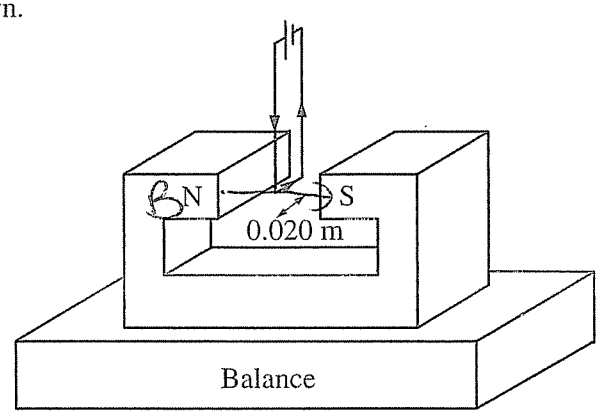

Note: Figure not drawn to scale.

F_B on wire is down ∴ F on magnet is up

(b) In which direction is the force on the magnet due to the current in the wire segment?

✓ Upward ____ Downward

Justify your answer. RHR gives direction of force F_B on wire from magnet. Newton's 3rd Law states F_{wire} on mag is = magnitude but opposite direction

(c) The reading on the balance changed by 0.060 N when the power supply was turned on. Calculate the strength of the magnetic field.

↑

$F_B = .06 = BIl$

$.06 = B(4)(.02)$

$B = 0.75\,T$

GO ON TO THE NEXT PAGE.

Suppose that various rectangular loops with the same total length of wire as found in part (a) were constructed such that the lengths of the horizontal segments of the wire loops varied between 0.02 m and 0.10 m. The horizontal segment of each loop was always centered between the poles, and the current in each loop was always 4.0 A. The following graph represents the theoretical relationship between the magnitude of the force on the magnet and the length of the wire.

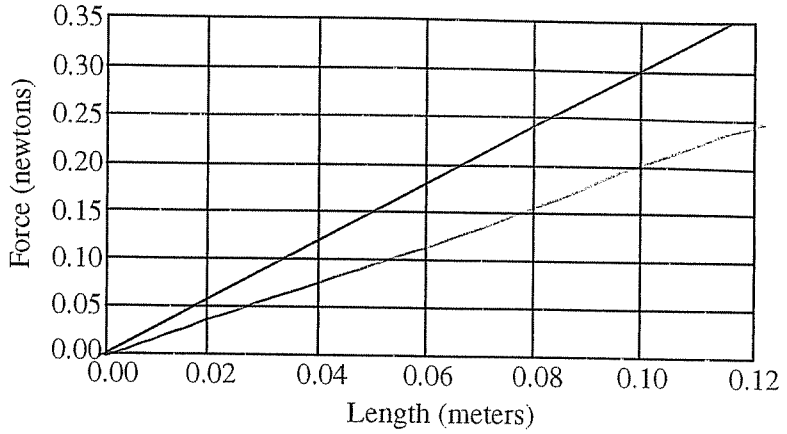

slope = $\frac{\Delta F_B}{\Delta l}$ = BI

(d) On the graph above, sketch a possible relationship between the magnitude of the force on the magnet and the length of the wire segment if the wire segments were misaligned and placed at a constant nonperpendicular angle to the magnetic field, as shown below.

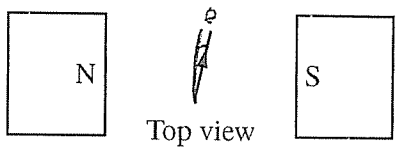

less ⊥ length = less force with same wire length

(e) Suppose the loops are correctly placed perpendicular to the field and the following data are obtained. Describe a likely cause of the discrepancy between the data and the theoretical relationship.

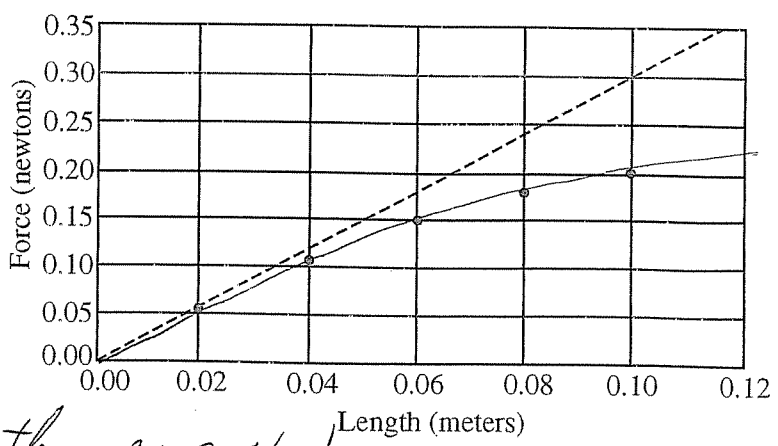

Since F is less than expected B, I or l is decreasing. B is const due to permanent magnet (unless magnet is heating up), l is correctly measured as is θ so I must be decreasing. This could happen as the resistance of the wires is increasing. This is caused by heating of the wires - if at constant temp then the voltage source is weakening

GO ON TO THE NEXT PAGE.

a) $d_y = \frac{V_{fy}^2 - V_{oy}^2}{2a_y}$ $\quad .15 = \frac{0 - V_{oy}^2}{2(-9.8)}$ $\quad 2.94 = V_{oy}^2$

$V_{oy} = 1.71 \frac{m}{s}$

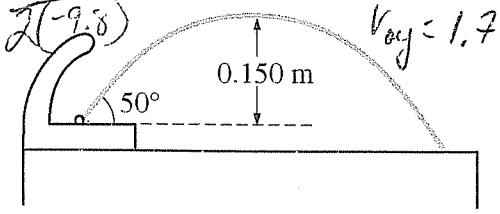

$V = \frac{V_{oy}}{\sin 50} = 2.24 \frac{m}{s}$

4. (10 points)

A drinking fountain projects water at an initial angle of 50° above the horizontal, and the water reaches a maximum height of 0.150 m above the point of exit. Assume air resistance is negligible.

(a) Calculate the speed at which the water leaves the fountain.

$V = A_v = 8.95 \times 10^{-3} \frac{m^3}{s}$

(b) The radius of the fountain's exit hole is 4.00×10^{-3} m . Calculate the volume rate of flow of the water.

(c) The fountain is fed by a pipe that at one point has a radius of 7.00×10^{-3} m and is 3.00 m below the fountain's opening. The density of water is 1.0×10^3 kg/m^3 . Calculate the gauge pressure in the feeder pipe at this point.

$A_1 v_1 = A_2 v_2$

$v_1 = \frac{A_2 v_2}{A_1} = \frac{8.95 \times 10^{-3}}{7 \times 10^{-3}} = 1.28 \frac{m}{s}$

atm gauge

$P_1 + \rho g h_1 + \frac{1}{2}\rho v_1^2 = P_2 + \rho g h_2 + \frac{1}{2}\rho v_2^2$

gauge + atm $\quad$ atm

$P_1 - P_2 + 1 \times 10^3 (9.8)(-3) + \frac{1}{2} 1000 (1.28)^2 = 0 + \frac{1}{2} 1000 (2.24)^2$

$P_{gauge} - 29400 + 819.2$

$P_{gauge} = 31089.6$

$= 3.11 \times 10^4 \frac{N}{m^2}$

31.1 kPa

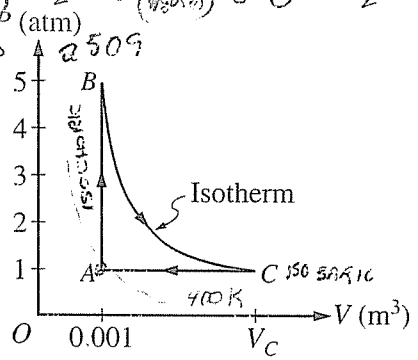

5. (10 points)

A 0.03 mol sample of helium is taken through the cycle shown in the diagram above. The temperature of state A is 400 K.

$T \propto PV$

(a) For each process in this cycle, indicate in the table below whether the quantities W, Q, and ΔU are positive (+), negative (–), or zero (0). W is the work done on the helium sample.

$\Delta U \propto \Delta$

$\Delta U = Q + W$

Process	W	Q	ΔU
$A \rightarrow B$	0	+	+
$B \rightarrow C$	–	+	0
$C \rightarrow A$	+	–	–

since P↑ at V=const greater collisions/sec means energy in ∴ Q↑

gas expands ∴ does work on environment but Internal energy = const ∴ Q is added

$U_B > U_A$ ∴ $\Delta U_{A \rightarrow B} = +$

ISOCHORIC $\Delta V = 0$ $W = 0$

(b) Explain your response for the signs of the quantities for process $A \rightarrow B$.

gas is compressed at const P ∴ work done on gas (system) but ΔU – ∴ heat exits

(c) Calculate V_C.

$T_B = \frac{P_B V_B}{nR} = T_C = \frac{[5(1.01 \times 10^5)](.001)}{1\ (8.31)} =$

OR

$P_B V_B = P_C V_C$

$5(.001) = 1\ V_C$

$V_C = .005\ m^3$

GO ON TO THE NEXT PAGE.

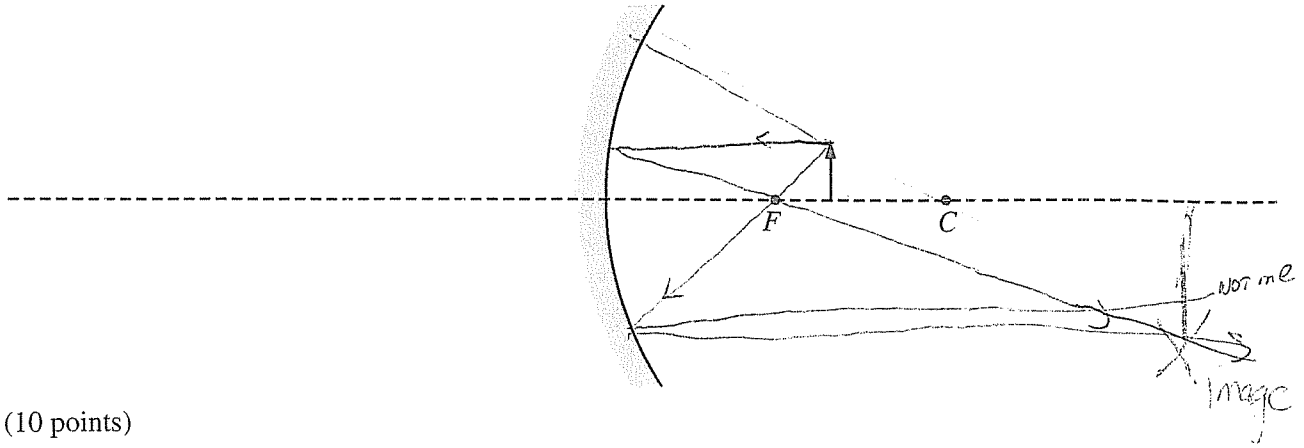

6. (10 points)

The figure above shows a converging mirror, its focal point F, its center of curvature C, and an object represented by the solid arrow.

(a) On the figure above, draw a ray diagram showing at least two incident rays and the image formed by them.

(b) Is the image real or virtual?

✓ Real ____ Virtual

Justify your answer. Convergent reflected rays

$\frac{1}{6} = \frac{1}{8} + \frac{1}{d_i}$ $d_i = \frac{1}{\frac{1}{6} - \frac{1}{8}} = 24\text{cm}$

(c) The focal length of this mirror is 6.0 cm, and the object is located 8.0 cm away from the mirror. Calculate the position of the image formed by the mirror. (Do NOT simply measure your ray diagram.)

(d) Suppose that the converging mirror is replaced by a diverging mirror with the same radius of curvature that is the same distance from the object, as shown below.

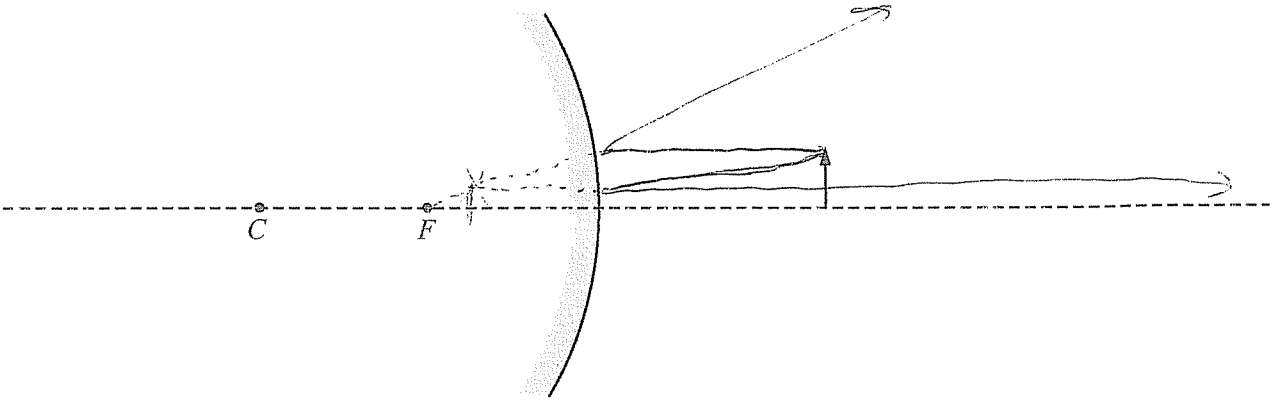

For this mirror, how does the size of the image compare with that of the object?

____ Larger than the object ✓ Smaller than the object ____ The same size as the object

Justify your answer.

Since reflected rays diverge & the incident ray || to P.A. passed in line with f when reflected, it marks the max image height. All other rays will reflect at lower height unless || to PA meaning object at ∞. 8cm < ∞

OR for divergent mirror f is neg & $d_i = \frac{1}{\frac{-1}{6} - \frac{1}{8}} = -3.43\text{cm}$

$\frac{h_i}{h_o} = \frac{-d_i}{d_o}$ for conv. $h_i = -3h_o$ (larger)

for div $h_i = \frac{-3.43}{8} h_o = .42 h_o$ smaller as $\left|\frac{d_i}{d_o}\right| < 1$

GO ON TO THE NEXT PAGE.

7. (10 points)

In an electron microscope, a tungsten cathode with work function 4.5 eV is heated to release electrons that are then initially at rest just outside the cathode. The electrons are accelerated by a potential difference to create a beam of electrons with a de Broglie wavelength of 0.038 nm. Assume nonrelativistic equations apply to the motion of the electrons.

(a) Calculate the momentum of an electron in the beam, in kg•m/s .

(b) Calculate the kinetic energy of an electron in the beam, in joules.

(c) Calculate the accelerating voltage.

(d) Suppose that light, instead of heat, is used to release the electrons from the cathode. What minimum frequency of light is needed to accomplish this?

a) $p = mv = h/\lambda$ $\quad p = \frac{h}{\lambda} = 1.74\times10^{-23}\ \frac{kg\,m}{s}$

b) $v = \frac{p}{m} = 1.91\times10^{7}\ \frac{m}{s}$

$\frac{1}{2}mv^2 = 1.67\times10^{-16}\ J$

c) $\Delta E_k = \Delta E_p$

$\frac{1}{2}mv^2 = QV_a$

$\frac{1.67\times10^{-16}}{1.6\times10^{-19}} = 1043V$

$1.04\times10^{3}V$

d) $E_k = hf - \phi$

$0 = hf - 4.5$

$4.5 = hf$

$4.5 = 4.14\times10^{-15} f$

$f = 1.09\times10^{15}\ Hz$

END OF EXAM

$4.5\,eV = 7.2\times10^{-19}\ J$